REV.	REVISION DESCRIPTION	DATE	APPROVED

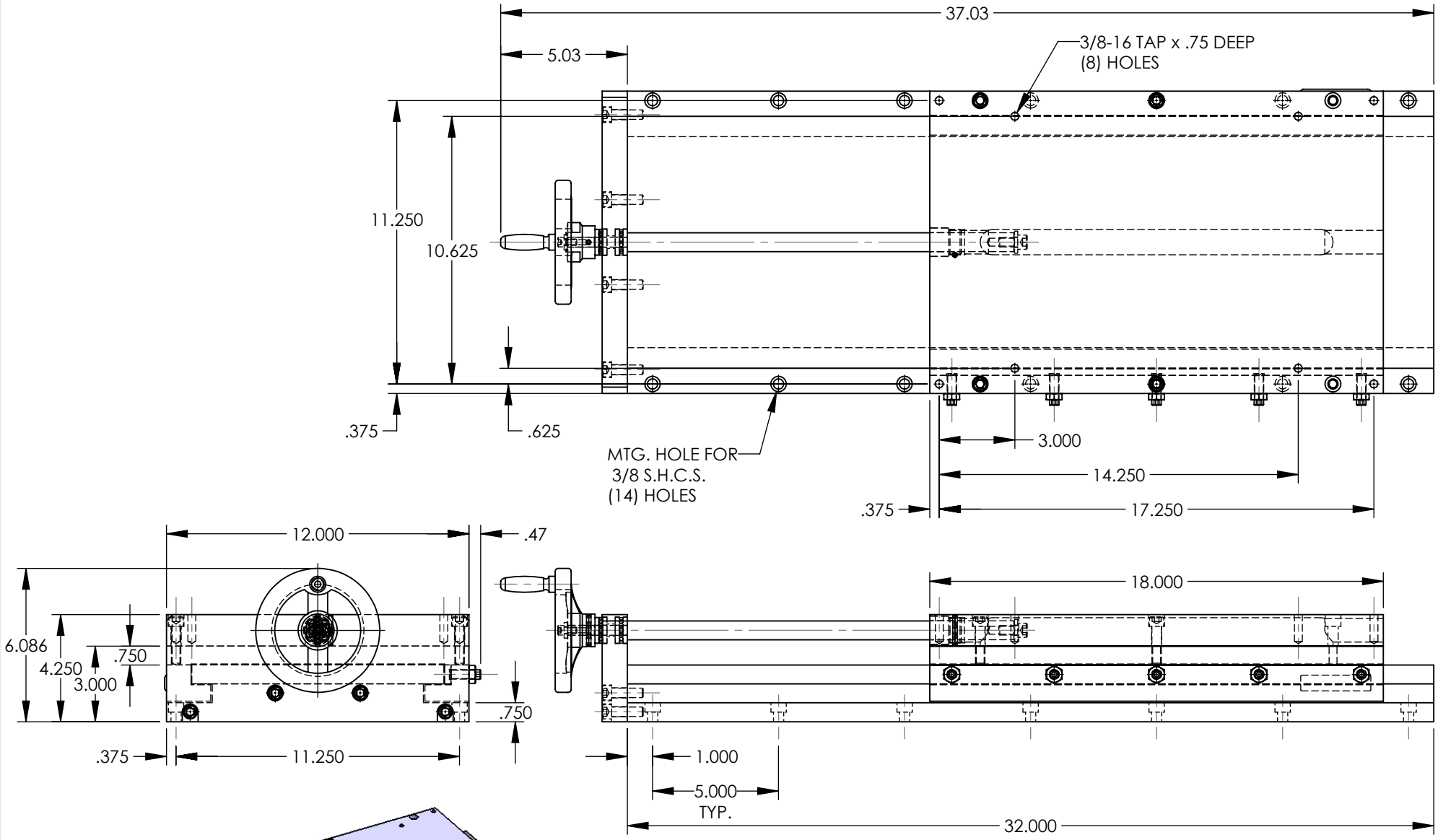

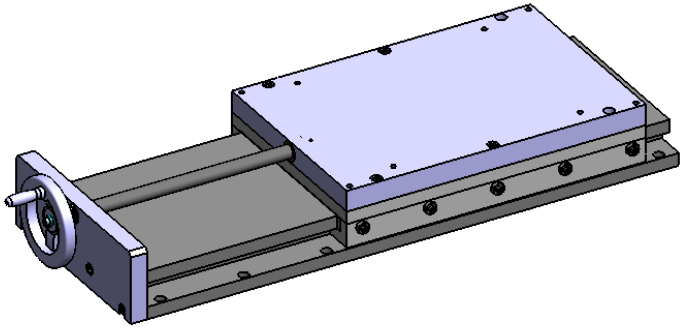

MODEL NAME: Gen2 SLIDE with LEAD SCREW CONFIG: SW12-SL18-BL32-LS

PROPRIETARY AND CONFIDENTIAL
THE INFORMATION CONTAINED IN THIS DRAWING IS THE SOLE PROPERTY OF AUTOMATED INDUSTRIAL MOTION. ANY REPRODUCTION IN PART OR AS A WHOLE WITHOUT THE WRITTEN PERMISSION OF AUTOMATED INDUSTRIAL MOTION IS PROHIBITED.

MATERIAL
ASSEMBLY
HARDEN
FINISH

	NAME	DATE
DRAWN	MAG	10/26/11
CHECKED	-	-
ENG APPR.	Wierengo	10/29/11

UNLESS OTHERWISE SPECIFIED:

DIMENSIONS ARE IN INCHES
TOLERANCES:
ANGULAR: MACH ±1/2 DEGREE
TWO PLACE DECIMAL ±.010
THREE PLACE DECIMAL ±.005
FOUR PLACE DECIMAL ±.0005

DURA-BOND SLIDE

TITLE:
GEN II SLIDE

SIZE	DWG. NO.	REV
A	SW12-SL18-BL32-LS	-

SCALE: NONE | WEIGHT: 362.4 lbs. | SHEET 1 OF 2